

DJS 2016-1:2026

ع ت ٢٠١٦-١/٢٠٢٦

Second edition

الإصدار الثاني

مشروع تصويت

أنظمة الأنابيب اللدائنية لتصريف المياه ومياه الصرف الصحي تحت الأرض بدون ضغط ـ أنظمة الأنابيب ذات الجدران المبنية من متعدد كلوريد الفنيل غير الملدّن ومتعدد البروبلين ومتعدد الإثيلين

الجزء ١: المتطلبات العامة وخصائص الأداء

Plastics piping systems for non-pressure underground drains and sewers — Structured-wall piping systems of unplasticized poly (vinyl chloride) (PVC-U), polypropylene (PP) and polyethylene (PE)
Part 1: General requirements and performance characteristics

"This national standard is based on EN 13476-1:2025 and parts of this standard are reproduced with the permission of the European Committee for standardization – CEN, Avenue Marnix 17, B 1000 Brussels, Belgium"

مؤسسة المواصفات والمقاييس

المملكة الأردنية الهاشمية

Contents

Foreword
1- Scope 1
2- Normative references 1
3- Terms and definitions, symbols and abbreviations 3
4- Material 6
5- Designation of wall construction 7
6- Appearance and colour 7
7- Geometrical characteristics 7
8- Types of fittings 8
9- System performance related test methods and characteristics 10
10- Marking 12
Annex A (Informative) Characteristics of PVC-U, PP and PE pipes and fittings 14
Annex B (Informative) Recommended minimum fitting classes 15
Annex C (Informative) Designation of pipes and corresponding fittings 16
Annex D (Informative) Guidance in cleaning plastics pipes 17
Annex E (Informative) Bibliography 20

Figures

Figure 1 – Example of an un-swept bend 8
Figure 2 – Example of a swept bend 8
Figure 3 – Example of coupler and slip coupler 9
Figure 4 – Example of reducer 9
Figure 5 – Example of a swept entry and a straight branch 9
Figure 6 – Example of a plug 10

Tables

Table 1 – Nominal sizes 7
Table 2 – Relationship between system performance and tested characteristics 11
Table B – 1 – Minimum fitting classes recommended for use with structured wall pipes 15
Table C – 1 – Applicable requirements for pipes 16
Table C – 2 – Applicable requirements for fittings 16
Table D – 1 – Required pressure (in bars) for block removal 18

This Jordanian Standard cancels and replaces the same Jordanian standard issued in 2012.

Foreword

Jordan Standards and Metrology Organization is the national standardization body in Jordan. The work of preparing Jordanian standards is normally carried out by technical committees composed of the interested parties, which are involved in the scope of the standard. All the interested parties have the right to vote on the draft Jordanian Standard during the enquiry stage, taking into consideration the importance of harmonizing Jordanian Standards with the International, regional or national standards (as much as possible) for the purpose of eliminating technical barriers to trade and facilitating international trade.

Jordanian Standards are drafted in accordance with the rules given in the Jordanian Directive 1-2/2005, Part 2: Rules for the structure and drafting of Jordanian Standards *.

The permanent technical committee for Plastics 22 has studied the Jordanian Standard 2016-1:2012 related to **"Plastics piping systems for non-pressure underground drainage and sewerage — Structured-wall piping systems of unplasticized poly (vinyl chloride) (PVC-U), polypropylene (PP) and polyethylene (PE), Part 1: General requirements and performance characteristics"**, and the prepared project 2016-1:2026 related to **"Plastics piping systems for non-pressure underground drains and sewers — Structured-wall piping systems of unplasticized poly (vinyl chloride) (PVC-U), polypropylene (PP) and polyethylene (PE), Part 1: General requirements and performance characteristics"** and has recommended to approve the amended project as a Jordanian Standard 2016-1:2026, according to article (12) of Standards and Metrology Law No. (22) for the year 2000 and it's amendments.

The Jordanian Standard 2016 includes the following parts under the same general title, **"Plastics piping systems for non-pressure underground drains and sewers — Structured-wall piping systems of unplasticized poly (vinyl chloride) (PVC-U), polypropylene (PP) and polyethylene (PE)"**:
- Part 1: General requirements and performance characteristics.
- Part 2: Specifications for pipes and fittings with smooth internal and external surface and the system, Type A.
- Part 3: Specifications for pipes and fittings with smooth internal and profiled external surface and the system, Type B.

This Jordanian Standard 2016-1:2026 is a modified adoption of the European Standard 13476-1:2025 **"Plastics piping systems for non-pressure underground drains and sewers — Structured-wall piping systems of unplasticized poly (vinyl chloride) (PVC-U), polypropylene (PP) and polyethylene (PE), Part 1: General requirements and performance characteristics"**, using reprint method, single vertical bars (|) in the margins are used to indicate the applicable technical modifications which have been changed and listed below, and single vertical dotted bars (:) in the margins are used to indicate the applicable editorial modifications which have been changed and listed below.
For the purposes of this Jordanian Standard, the following technical change has been made:
- Substitution of "EN 13476-2" by "JS 2016-2" and "EN 13476-3" by JS 2016-3" to confirm with published Jordanian Standards.

For the purposes of this part of Jordanian Standard, the following editorial changes have been made:
- Substitution of "this European Standard", "this Standard" and "this document" by "this Jordanian Standard".
- Add the word "clause" before any referenced clause number.
- Divide clause 1 to subclauses.
- Rearrange normative references in ascending order, applying the Jordanian Directive 1-2:2005, part 2: rules for the structure and drafting of Jordanian Standards.
- change title of clause 3 from "Terms and definitions" to Terms and definitions, symbols and abbreviations"
- Rearrange the symbols Z_1, Z_2, Z_3 in clause 3-4 in different rows.
- Addition of statement " Other sizes are permitted when following the conditions given in JS 2016-2 or JS 2016-3" as Note 2 into Table 1.
- Deletion of the paragraph: "The marking of an EN standard reference on a component requires conformance with all mandatory requirements of the standard, and that the component comes within the scope of standard." from clause 10-1 because it is referred to EN requirements.
- Deletion of the paragraph: "In some European countries, sewer cleaning is typically carried out using small portable rigs that employ low volumes of water at high pressure through small-bore (typically 1 mm) nozzles." from clause D-2-1 because it is an information referred to some European countries.
- Inclusion of bibliography in an informative Annex E.

A list of Jordanian Standards identical to the European standards which are referenced in the adopted standard, including its amendments is given below:
- JS 532-1:2007 EN 681-1:1996 is identical to EN 681-1:1996, Elastomeric seals - Materials requirements for pipe joint seals used in water and drainage applications, Part 1: Vulcanized rubber.
- JS 532-2:2007 EN 681-2:2000 is identical to EN 681-2:2000, Elastomeric Seals - Materials requirements for pipe joint seals used in water and drainage applications, Part 2: Thermoplastic elastomers.
- JS 532-4:2007 EN 681-4:2000 is identical to EN 681-4:2000, Elastomeric seals - Materials requirements for pipe joint seals used in water and drainage applications, Part 4: Cast polyurethane sealing elements.
- JS 324-1:2002 EN ISO 1043-1:2001 is identical to EN ISO 1043-1:2001, Plastics — Symbols and abbreviated terms, Part 1: Basic polymers and their special characteristics.

Plastics piping systems for non-pressure underground drains and sewers — Structured-wall piping systems of unplasticized poly (vinyl chloride) (PVC-U), polypropylene (PP) and polyethylene (PE)
Part 1: General requirements and performance characteristics

1- Scope

1-1 This Jordanian Standard, together with JS 2016-2 and JS 2016-3 specifies the definitions and general requirements for pipes, fittings and the system based on unplasticized poly (vinyl chloride) (PVC-U), polypropylene (PP) and polyethylene (PE) structured-wall piping systems that are intended for use in non-pressure underground drains and sewers for foul wastewater.

Note: Products complying with this Jordanian Standard can also be used in non-pressure underground drains and sewers for surface water.

1-2 This Jordanian Standard is applicable to:

a) structured-wall pipes and fittings, which are to be used buried in the ground outside a building structure only; reflected by the marking of products by "U";

b) structured-wall pipes and fittings, which are to be used buried in ground both outside (application area code "U") and within a building structure (application area code "D"); reflected in the marking of products by "UD".

In conjunction with EN JS 2016-2 and JS 2016-3 it is applicable to structured-wall pipes and fittings with or without an integral socket with elastomeric ring seal joints, as well as welded and fused joints.

1-3 This part specifies general aspects and gives guidance concerning a national selection of requirement levels and classes where JS 2016-2 and JS 2016-3 provide options.

1-4 JS 2016-2 and JS 2016-3 specify material characteristics, dimensions and tolerances, test methods, test parameters and requirements for pipes with smooth internal and external surfaces, Type A, and pipes with smooth internal and profiled external surfaces, Type B, respectively.

1-5 This Jordanian Standard, together with JS 2016-2 and JS 2016-3, is applicable to a range of pipe and fitting sizes, materials, pipe constructions, stiffness classes and tolerance classes and offers recommendations concerning colors.

Note 1: it is the responsibility of the purchaser or specifier to make the appropriate selections from these aspects, taking into account their particular requirements and any relevant national regulations and installation practices or codes.

Note 2: Pipes, fittings and other components conforming to any plastic product standards referred to in clause 2 can be used with pipes and fittings conforming to this Jordanian Standard, when they conform to the requirements for joint dimensions given in EN 13476-2 and to the performance requirements given in clause 9.

2- Normative references

The following documents, in whole or in part, are normatively referenced in this document and are indispensable for its application. For dated references, only the edition cited applies. For undated references, the latest edition of the referenced document (including any amendments) applies.

- ISO/TR 10358, Plastics pipes and fittings for industrial applications — Collection of data on combined chemical-resistance.
- ISO 11922-1, Thermoplastics pipes for the conveyance of fluids — Dimensions and tolerances, Part 1: Metric series.
- ISO 12091, Structured-wall thermoplastics pipes — Oven test.
- EN ISO 472, Plastics — Vocabulary (ISO 472).
- EN 476:2022, General requirements for components used in drains and sewers.

- EN ISO 580, Plastics piping and ducting systems – Injection-moulded thermoplastics fittings – Methods for visually assessing the effects of heating (ISO 580).
- EN 681-1, Elastomeric seals – Materials requirements for pipe joint seals used in water and drainage applications, Part 1: Vulcanized rubber.
- EN 681-2, Elastomeric seals – Materials requirements for pipe joint seals used in water and drainage applications, Part 2: Thermoplastic elastomers.
- EN 681-4, Elastomeric seals – Materials requirements for pipe joint seals used in water and drainage applications, Part 4: Cast polyurethane sealing elements.
- EN ISO 1043-1, Plastics – Symbols and abbreviated terms, Part 1: Basic polymers and their special characteristics (ISO 1043-1).
- EN ISO 1167-1, Thermoplastics pipes, fittings and assemblies for the conveyance of fluids – Determination of the resistance to internal pressure, Part 1: General method (ISO 1167-1).
- EN ISO 1167-2, Thermoplastics pipes, fittings and assemblies for the conveyance of fluids – Determination of the resistance to internal pressure, Part 2: Preparation of pipe test pieces (ISO 1167-2).
- EN ISO 2505, Thermoplastics pipes – Longitudinal reversion – Test method and parameters (ISO 2505).
- EN ISO 3126, Plastics piping systems – Plastics components – Determination of dimensions (ISO 3126).
- EN ISO 3127, Thermoplastics pipes – Determination of resistance to external blows – Round-the-clock method (ISO 3127).
- EN ISO 6259-1, Thermoplastics pipes – Determination of tensile properties, Part 1: General test method (ISO 6259-1).
- EN ISO 6259-2, Thermoplastics pipes – Determination of tensile properties, Part 2: Pipes made of unplasticized poly (vinyl chloride) (PVC-U), oriented unplasticized poly (vinyl chloride) (PVC-O), chlorinated poly (vinyl chloride) (PVC-C) and high-impact poly (vinyl chloride) (PVC-HI) (ISO 6259-2).
- EN ISO 9852, Unplasticized poly (vinyl chloride) (PVC-U) pipes – Dichloromethane resistance at specified temperature (DCMT) – Test method (ISO 9852).
- EN ISO 9967, Thermoplastics pipes – Determination of creep ratio (ISO 9967).
- EN ISO 9969, Thermoplastics pipes – Determination of ring stiffness (ISO 9969).
- EN ISO 11173, Thermoplastics pipes – Determination of resistance to external blows – Staircase method (ISO 11173).
- EN ISO 11357-6, Plastics – Differential scanning calorimetry (DSC), Part 6: Determination of oxidation induction time (isothermal OIT) and oxidation induction temperature (dynamic OIT) (ISO 11357-6).
- EN ISO 13257:2018, Thermoplastics piping systems for non-pressure applications – Test method for resistance to elevated temperature cycling (ISO 13257:2018).
- EN ISO 13259, Thermoplastics piping systems for underground non-pressure applications – Test method for leaktightness of elastomeric sealing ring type joints (ISO 13259).
- EN ISO 13260, Thermoplastics piping systems for non-pressure underground drainage and sewerage – Test method for resistance to combined temperature cycling and external loading (ISO 13260).
- EN ISO 13262, Thermoplastics piping systems for non-pressure underground drainage and sewerage – Thermoplastics spirally-formed structured-wall pipes – Determination of the tensile strength of a seam (ISO 13262).
- EN ISO 13263, Thermoplastics piping systems for non-pressure underground drainage and sewerage – Thermoplastics fittings – Test method for impact strength (ISO 13263).
- EN ISO 13264, Thermoplastics piping systems for non-pressure underground drainage and sewerage – Thermoplastics fittings – Test method for mechanical strength or flexibility of fabricated fittings (ISO 13264).

- EN ISO 13967, Thermoplastics fittings – Determination of ring stiffness (ISO 13967).
- EN ISO 13968, Plastics piping and ducting systems – Thermoplastics pipes – Determination of ring flexibility (ISO 13968).
- EN 14541-1:2022, Plastics pipes and fittings – Utilisation of thermoplastics recyclates, Part 1: Vocabulary.
- JS 2016-2:2026, Plastics piping systems for non-pressure underground drains and sewers – Structured-wall piping systems of unplasticized poly (vinyl chloride) (PVC-U), polypropylene (PP) and polyethylene (PE), Part 2: Specifications for pipes and fittings with smooth internal and external surface and the system, Type A.
- JS 2016-3:2026, Plastics piping systems for non-pressure underground drains and sewers – Structured-wall piping systems of unplasticized poly (vinyl chloride) (PVC-U), polypropylene (PP) and polyethylene (PE), Part 3: Specifications for pipes and fittings with smooth internal and profiled external surface and the system, Type B.

3- Terms and definitions, symbols and abbreviations

For the purposes of this Jordanian Standard, the following terms and definitions given in EN ISO 472, EN ISO 1043-1, ISO 11922-1, EN 14541-1:2022 and the following apply.
ISO and IEC maintain terminological databases for use in standardization at the following addresses:
• IEC Electropedia: available at http://www.electropedia.org/
• ISO Online browsing platform: available at http://www.iso.org/obp

3-1 General Definitions

3-1-1
application area code
code used to mark pipes and fittings to indicate the application area(s) for which they are intended, as follows:
U: for the area more than 1 m from the building to which the buried piping system is connected.
UD: for application area U and the area under and within 1 m from the building where the pipes and fittings are buried in ground and are connected to the soil and waste discharge system of the building

3-1-2
structured-wall pipes and fittings
pipes and fittings which have an optimized design with regard to material usage to achieve the physical, mechanical and performance requirements of this Jordanian Standard
Note: For a description of the particular designs covered by this Jordanian Standard, see clause 5 in JS 2016-2 and JS 2016-3.

3-1-3
fabricated fitting
fittings produced from pipe and/or from injection-moulded fittings by thermoforming, adhesive joint or welding
Note: Fabricated fittings need an additional fabrication step.

3-1-4
foul wastewater
wastewater comprising domestic wastewater and/or industrial wastewater

3-1-5
surface water
water from precipitation, which has not seeped into the ground and is discharged to the drain or sewer system directly from the ground or from exterior building surfaces.

3-2 Geometrical definitions

3-2-1

nominal size, DN

numerical designation of the size of a component, which is a convenient round number approximately equal to the manufacturing dimension

Note 1: Nominal size is expressed in millimetres (mm).

Note 2: This designation is not used for threaded components.

3-2-2

nominal size, DN/OD

nominal size, related to the outside diameter

3-2-3

nominal size, DN/ID

nominal size, related to the inside diameter

3-2-4

nominal diameter, d_n

specified diameter, assigned to a nominal size

Note: It is expressed in millimetres (mm).

3-2-5

outside diameter, d_e

value of the measurement of the outside diameter through its cross-section at any point of a pipe or spigot end, rounded up to the nearest0,1 mm

3-2-6

mean outside diameter, d_{em}

value of the measurement of the outer circumference of a pipe or spigot end of a fitting in any cross-section, divided by π (pi $\approx$ 3,142), rounded up to the nearest 0,1 mm

3-2-7

mean inside diameter of a pipe or a fitting, d_{im}

arithmetical mean of a number of measurements of the inside diameter of a pipe or a fitting in the same cross-section

Note: Alternatively for type A2 pipes, dim may be calculated as $dim = dem - 2 \cdot ec$.

3-2-8

wall thickness, e

value of measurement of the wall thickness at any point around the circumference of a component

3-2-9

construction height, e_c

mean radial distance between the external and internal surfaces of the wall for Type A1 and A2 pipes and fittings, or mean radial distance between the top of ribs or corrugation and the inside surface of the wall for Type B pipes and fittings

3-2-10

ring flexibility

ability of a pipe to resist diametric deflection without the loss of structural integrity

3-2-11

pipe stiffness

mechanical characteristic of a pipe, which is a measure of the resistance to diametric (ring) deflection under an external force as determined in accordance with EN ISO 9969

3-2-12

fitting stiffness

mechanical characteristic of a fitting which is a measure of the resistance to diametric (ring) deflection under an external force as determined in accordance with EN ISO 13967.

3-2-13
ring stiffness class, SN
numerical designation of the ring stiffness of the pipe or fitting which is a convenient round number, relative to the determined stiffness in kiloNewtons per square meters (kN/m2), indicating the minimum required ring stiffness of the pipe or stiffness of the fitting
3-2-14
drain
pipeline, usually underground, designed to carry wastewater from a source to a sewer
[SOURCE: EN 16323:2014]
3-2-15
sewer
pipeline or other construction, usually underground, designed to carry wastewater from more than one source
[SOURCE: EN 16323:2014]
3-3 Material definitions
3-3-1
virgin material
plastics material in the form of pellets, granules, powder, floc, etc. that has not been subjected to use or processing other than that required for its initial manufacture
Note 1: Does not contain any reworked plastics material and/or plastics recyclate.
Note 2: Sometimes also referred to as "primary material" or "primary plastics feedstock".
Note 3: It is understood that the addition of additives such as stabilizers and pigments is still resulting into a virgin (plastics) material.
[SOURCE: EN 14541-1:2022]
3-3-2
reworked material
plastics material from rejected unused products or trimmings capable of being reclaimed within the same process that generated it
Note 1: Reworked material does not change the status of the feedstock.
Note 2: This definition does not cover the conditions for the use of reworked material, which can be found in the applicable product standard
Note 3: Previously referred to as "own reprocessed material"
[SOURCE: EN 14541-1:2022]
3-3-3
recyclate
plastics material resulting from the recycling of pre-consumer and post-consumer plastics products
Note 1: Also referred to as "secondary raw material" or "recycled plastics" or "regenerate".
Note 2: Recycling can be chemical, physical or mechanical.
[SOURCE: EN 14541-1:2022]
3-3-4
pre-consumer material
plastics material diverted from the waste stream during a manufacturing process, excluding reworked (plastics) material
Note 1: Previously referred to as "post-industrial material".
Note 2: Different categories of pre-consumer material may be considered in the applicable product standard.
[SOURCE: EN 14541-1:2022]
3-3-5
post-consumer material
plastics material generated by households or by commercial, industrial and institutional facilities in their role as end-users of the product which can no longer be used for its intended purpose

Note 1: This includes returns of material from the distribution chain.
Note 2: Different categories of post-consumer material may be considered in the applicable product standard.
[SOURCE: EN 14541-1:2022]

3-3-6
compound/formulation
clearly defined homogenous mixture of substances used for the manufacture of the product
Note 1: In general, the term "compound" is used for polyolefins and the term "formulation" for PVC.
Note 2: For metals and when dealing with water and food contact regulations the term "composition" is often used instead of compound/formulation.
[SOURCE: EN 14541-1:2022]

3-3-7
agreed specification
specification of the relevant material characteristics agreed between the supplier of the recyclate and the pipe and/or fitting manufacturer
Note: The agreed specification is often considered in the context of certification by a third party organization.
[SOURCE: EN 14541-1:2022]

3-3-8
batch
definite quantity of some commodity manufactured or produced under conditions that are presumed uniform
Note: Batch can apply to material and products.
[SOURCE: EN 14541-1:2022, 3-13]

3-4 Symbols and abbreviations
For the purposes of this Jordanian Standard, the following symbols and abbreviations apply.
$d_{n,1}$: nominal diameter of the main of a branch
$d_{n,2}$: nominal diameter of the branch of a branch
L_1: insert length
Z_1: design length of a fitting
Z_2: design length of a fitting
Z_3: design length of a fitting.
α: nominal angle of fitting
BRT: batch release test
DN: nominal size
DN/ID: nominal size related to inside diameter
DN/OD: nominal size related to outside diameter
PE: polyethylene
PP: polypropylene
PP-MD: Mineral modified PP
PVC-U: unplasticized poly (vinyl chloride)
RF: ring flexibility performance
S: pipe series S
SDR: standard dimension ratio
SN: ring stiffness class

4- Material

4-1 General

The material shall be one of the materials specified in the relevant clauses and annexes of JS 2016-2:2026 or JS 2016-3:2026, as applicable.
Note: Information about general material characteristics is given in Annex A.

4-2 Utilization of reworked material and recyclate

The specifications for the material and permitted addition levels are specified in JS 2016-2:2026 or JS 2016-3:2026.

4-3 Sealing ring retaining components

Sealing rings may be retained using components made from PVC-U, PP, PE or other polymers.

4-4 Sealing rings

The sealing ring material shall conform to all the requirements in EN 681-1, EN 681-2 or EN 681-4, as applicable. The sealing ring shall have no detrimental effects on the component properties.

4-5 Fused or welded joints

When fused or welded joints are used, the pipes and/or fittings manufacturer's instructions for jointing shall be followed.

4-6 Adhesives for PVC-U

Requirements for adhesives for jointing of PVC-U are specified in clause 5-8 of JS 2016-2:2026 and clause 5-8 of JS 2016-3:2026.

5- Designation of wall construction

Pipes and fittings with smooth internal and external surfaces are designated as Type A. Pipes and fittings with smooth internal and profiled external surfaces are designated as Type B.

Definitions of wall constructions including schematic sketches and examples of typical jointing methods are given in JS 2016-2:2026 for Type A pipes and in JS 2016-3:2026 for Type B pipes.

6- Appearance and colour

6-1 Appearance

When viewed without magnification, the following requirements apply:

a) visible surfaces (internal and external) of pipes and fittings shall be smooth, clean and free from grooving, blistering, visible impurities or pores and any other surface irregularity likely to prevent conformity to this Jordanian Standard, for foamed pipes, irregularities in the intermediate layer on pipe ends are acceptable;

b) pipe and fittings end shall be cleanly cut square to the axis of the pipe, and within any cutting zone recommended by the manufacturer, or according to the profile geometry as specified by the manufacturer;

c) edges on spirally formed pipes and fittings which become sharp when cut, shall be rounded off.

6-2 Colour

The inner and outer layer of pipes and fittings shall be coloured throughout. The outer layer of pipes and fittings should preferably be black, orange-brown (approximately RAL 8023 [1]) or dusty grey (approximately RAL 7037 [1]). Other colours may be used. No requirements for intermediate layers.

7- Geometrical characteristics

This Jordanian standard specifies nominal sizes for DN/ID given in Table 1 and for DN/OD given in Table 1.

Table 1 – Nominal sizes

Nominal sizes: DN/ID (in mm)	100, 125, 150, 200, 225, 250, 300, 400, 500, 600, 800, 1 000, 1 200, 1 400, 1 600, 1 800, 2 000, 2 200, 2 400, 2 500, 2 600, 2 800, 3 000
Nominal sizes: DN/OD (in mm)	110, 125, 160, 200, 250, 315, 400, 500, 630, 800, 1 000, 1 200, 1 400, 1 600, 1 800, 2 000, 2 200, 2 400, 2 500, 2 600, 2 800, 3 000
Note 1: For dimensions larger than DN 3 000 OD/ID this Jordanian Standard may be applied regarding appearance, colour, physical and mechanical characteristics as well as performance requirements. Note 2: Other sizes may be used when following the conditions given in JS 2016-2:2026 or JS 2016-3:2026.	

8- Types of fittings

8-1 General

This Jordanian Standard is applicable for the following types of fittings.

Figures 1 to 6 give examples for typical designs. Other designs of fittings including all socket and all spigot, may be used.

a) Bends un-swept and swept angle (see Figure 1 and Figure 2).

b) Couplers and slip couplers (see Figure 3).

Note: Preferred nominal angles, α, are the following: 15°, 22,5°, 30°, 45° and between 87,5° and 90°.

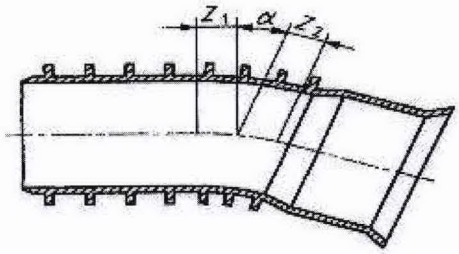

Key

α: nominal angle

Z_1: design length

Z_2: design length

Figure 1 – Example of an un-swept bend

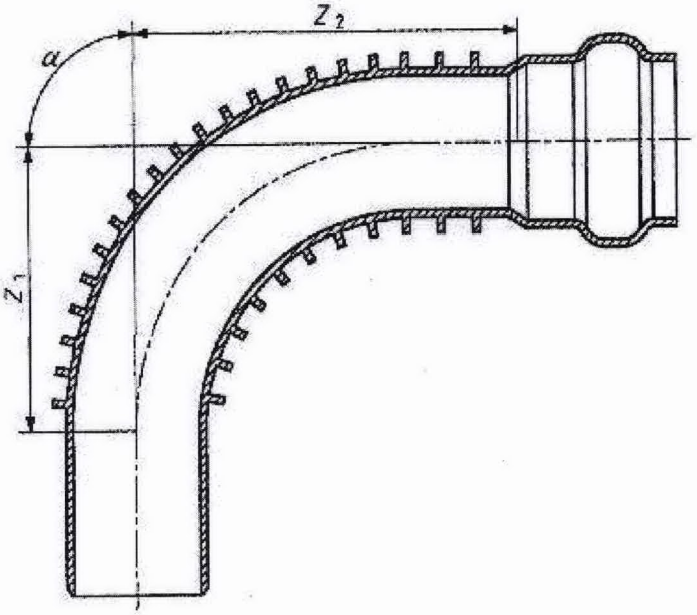

Key

α: nominal angle

Z_1: design length

Z_2: design length

Figure 2 – Example of a swept bend

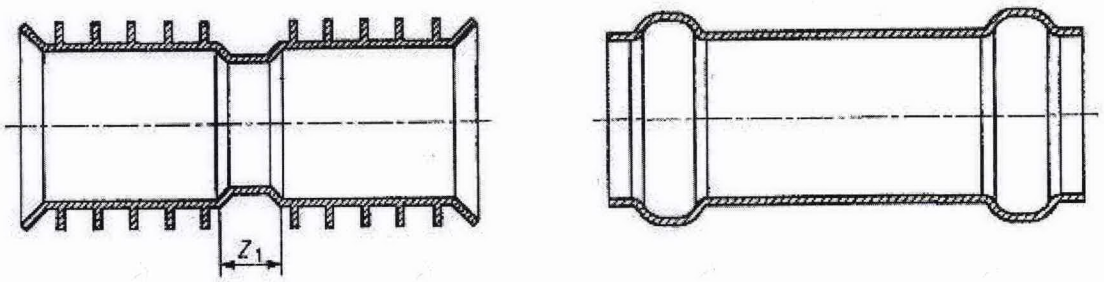

Key
Z_1: design length

Figure 3 – Example of coupler and slip coupler

c) Reducers (see Figure 4).

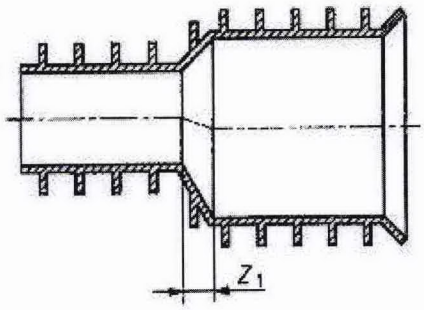

Key
Z_1: design length

Figure 4 – Example of reducer

d) Branches and reducing branches un-swept and swept entry (see Figure 5).
Note: Preferred nominal angles, α, are 45° and between 87,5° and 90°.

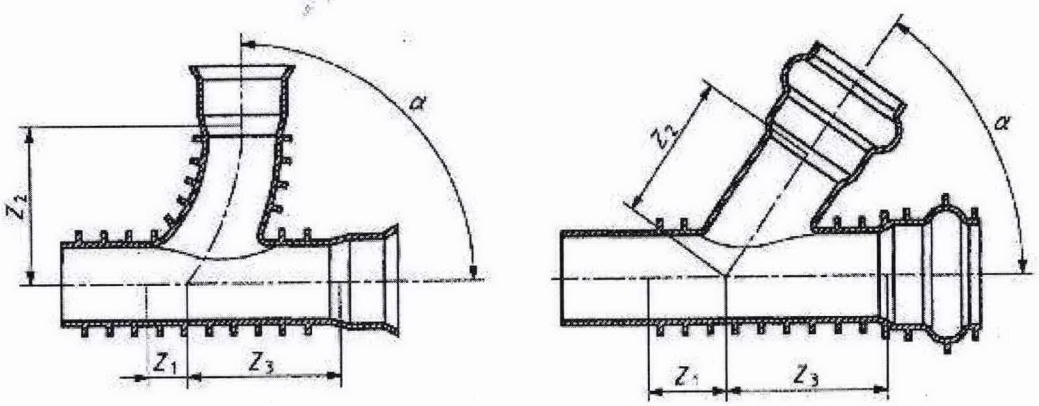

Key
α: nominal angle
Z_1: design length
Z_2: design length
Z_3: design length

Figure 5 – Example of a swept entry and a straight branch

e) Plugs (see Figure 6).
The insert length, L_1, shall be sufficient to ensure engagement of the sealing ring of at least 10 mm:
1) when measured from the effective sealing point to the end of the cylindrical part of the spigot when the sealing ring is positioned in the socket, or
2) when measured from the effective sealing point to the mouth of the cylindrical part of the socket when the sealing ring is positioned on the spigot.

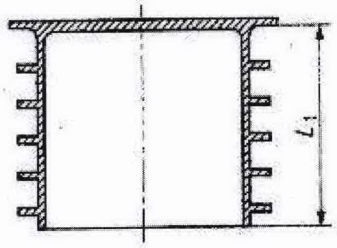

Key
L_1: insert length

Figure 6 – Example of a plug

8-2 Design length of fittings
The design length(s) (Z-lengths) of the fittings (see Figure 1 to Figure 6) shall be declared by the manufacturer.
Note: The design lengths (Z-lengths) are intended to assist with the design of moulds and are not intended to be used for quality control purposes, ISO 265-1:1988 [1] can be used as a guideline.

9- System performance related test methods and characteristics

The performance requirements of the system components and their relation to the tested characteristics specified in JS 2016-2:2026 or JS 2016-3:2026, as applicable, shall be explained in Table 2.
Annex B gives guidelines for recommended minimum fitting classes.
Note: The performance of the installed drain or sewer depends on the ability of the individual components to work together as a complete piping system.

Table 2 – Relationship between system performance and tested characteristics

System Performance	Tested characteristic		Reference		Test Method
			JS 2016-2	JS 2016-3	
Handling, transport, storing and installation robustness	Pipes	Impact strength	Table 14	Table 14	EN ISO 3127 or EN ISO 11173
		Tensile strength of seam	Table 14	Table 14	EN ISO 13262
	Fittings	Impact strength	Table 16	Table 16	EN ISO 13263
Resistance to soil load including traffic load, both during and after installation	Pipes	Ring stiffness	Table 14	Table 14	EN ISO 9969
		Ring flexibility	Table 14	Table 14	EN ISO 13968
		Tensile strength of seam	Table 14	Table 14	EN ISO 13262
		Creep ratio	Table 14	Table 14	EN ISO 9967
	Fittings	Ring stiffness	Table 16	Table 16	EN ISO 13967 /same stiffness class as pipe if same wall construction as pipe
		Mechanical strength or flexibility of fabricated fitting	Table 16	Table 16	EN ISO 13264
Ability to hold fluid inside and outside the system (leak tightness)	System	Dimensions and tolerances	Clause 7	Clause 7	EN ISO 3126
		Tightness	Table 17	Table 17	EN ISO 13259
		Water tightness – fabricated fittings	Table 17	Table 17	EN 476:2022, clause 7-4
		Tensile test of welded and fused joints	Table 17	Table 17	EN ISO 13262
Resistance to high temperature	System	Elevated temperature cycling for sizes up to 160 mm (ID)/200 mm (OD)	Table 17	Table 17	EN ISO 13257 :2018, assembly B, Figure 2 (EN 476:2022, clause 7-4-3-3)
		Box loading	Table 17	Table 17	Method A or B of EN ISO 13260

Table 2 – Relationship between system performance and tested characteristics (cont.)

System Performance	Tested characteristic		Reference		Test Method
			JS 2016-2	JS 2016-3	
Cleaning and maintenance	System	Rodding; Flushing; High volume low pressure High pressure cleaning	—	—	See [a]
Effect of processing on long term performance	Pipes	Resistance to dichloromethane	Table 8	Table 8	EN ISO 9852 (PVC only)
		Strain at break ≥ 80 %	Table 8	Table 8	EN ISO 6259-1 and EN ISO 6259-2
		Resistance to heating – oven test – Type B	n.a.	Tables 8, 10, and 12	ISO 12091
		Longitudinal reversion – Type A	Tables 8, 10, and 12	n.a.	EN ISO 2505
	Fittings	Resistance to heating – oven test	Tables 9, 11 and 13	Tables 9, 11 and 13	EN ISO 580
Long term performance material	Material	Resistance to internal pressure	Tables 1, 2, 3 and 4	Tables 1, 2, 3 and 4	EN ISO 1167-1 and EN ISO 1167-2
		Chemical resistance	Tables 1, 2, 3 and 4	Tables 1, 2, 3 and 4	ISO/TR 10358
		Thermal stability of used compound / formulation	Tables 2,3 and 4	Tables 2, 3 and 4	EN ISO 11357-6 (PE and PP only)

[a] Test methods for cleaning and maintenance are not included in this Jordanian Standard. Experience has shown that the wall thickness, impact resistance and material requirements given in JS 2016-2 or JS 2016-3, as applicable, ensure that the systems can resist the normal cleaning procedures. See also Annex D for guidance on practical cleaning.

10- Marking

10-1 general

Marking elements shall be printed or formed directly on the component or be on a label in such a way that after storage, handling and installation, the required legibility is maintained.

Three levels of legibility of the marking on components are specified for the individual marking aspects given in JS 2016-2 and JS 2016-3. The required legibility of marking is coded as follows:

a) durable in use;
b) legible at least until the system is installed;
c) marking on the packaging is legible at least until the component is installed.

Note: The manufacturer is not responsible for marking becoming illegible due to actions during installation and use such as painting, scratching, covering of the components or by use of e.g. detergents on the components, unless agreed with, or specified by the manufacturer.

10-2 Marking process

Marking shall be carried out so it does not initiate cracks or other types of defects which are likely to prevent conformity to this Jordanian standard.

10-3 Size

The size of the marking shall be such that the marking is legible without magnification.

Annex B
(Informative)
Recommended minimum fitting classes

Because of their geometry, solid–wall fittings have a stiffness greater than the stiffness of the pipe with corresponding wall-thickness series. Therefore, the recommended stiffness classes/wall-thickness series of fittings for use with structured-wall pipes given in Table B –1 apply:

Table B – 1 – Minimum fitting classes recommended for use with structured wall pipes

Pipe stiffness class	Minimum stiffness of fittings according to:		Minimum wall-thickness series of fittings according to:		
	JS 2016-2 and JS 2016-3	EN14758-1[6]	EN 1852-1[4]	EN 1401-1[3]	EN 12666-1[5]
SN 2	SN 2	SN 4	S 20	SDR 51	SDR 33
SN 4	SN 4	SN 4	S 20	SDR 51	SDR 33
SN 8	SN 8	SN 8	S 16	SDR 41	SDR 26
SN 16	SN 16	SN 16	S 13,3	SDR 34	SDR 21

Annex C
(Informative)
Designation of pipes and corresponding fittings

The specifier is responsible for ensuring that he or she identifies his or her requirements taken from Table C – 1 for pipes and Table C – 2 for fittings as follows:

Table C – 1 – Applicable requirements for pipes

Characteristic	Requirement
Standard	JS 2016-2 :2026or JS 2016-3:2026, as applicable.
Diameter	required diameter expressed either as the outside or inside diameter (DN/OD or DN/ID).
Diameter tolerance	for PP and PE only, the designation CT if the tolerance is required.
Type	required construction of the pipe expressed as either Type A or Type B.
Ring stiffness	required stiffness class expressed as SN or if applicable guaranteed minimum stiffness.
Ring flexibility	see JS 2016-2:2026 or JS 2016-3:2026 as applicable.
Material	required material expressed as PVC-U, PP or PE.
MFR	required MFR class of any PP pipe intended for site thermal fusion.
Application area	intended application expressed either as U if remote from the building or UD if intended for use under or close to the building.
Impact	see JS 2016-2:2026 or JS 2016-3:2026 as applicable.
Socket	if a short socket is required the designation "Short Socket".

Table C – 2 – Applicable requirements for fittings

Characteristic	Requirement
Standard	required standard either as JS 2016-2:2026 or JS 2016-3: 2026 or one of equivalent plastics pipe standards, as applicable.
Size	diameter of the pipe with which the fitting is intended to be jointed expressed either as DN/OD or DN/ID.
Diameter tolerance	for PP and PE only the designation CT if a tighter tolerance is required.
Angle	nominal angle of any branch or bend.
Ring stiffness	required stiffness class expressed as SN or if applicable guaranteed minimum stiffness.
Material	required material expressed as PVC-U, PP or PE.
MFR	required MFR class of any PP intended for site thermal fusion.
Application area	intended application expressed either as U if remote from the building or UD, if intended for use under or close to the building.

Annex D
(Informative)
Guidance in cleaning plastics pipes

D-1 Introduction

All types of gravity drain and sewer systems require a regular cleaning regime to ensure they achieve efficient performance. The management and control of these cleaning operations are covered by EN 14654-1[8].
This annex summarizes a recommended practice for the effective use of pressurized jetting to clean and unblock sewer pipes, while minimizing any risk of damage to the pipe system.
A brief review of other cleaning methods is also included.

D-2 Cleaning and unblocking

D-2-1 Choosing the right equipment

However, there is increasing evidence from independent jetting tests (see clause D-3), that high volume water at low pressures is a more effective way to remove obstructions and thoroughly cleanse accumulated sediments from pipes, as well as for routine maintenance. These methods use a larger bore (typically 2,8 mm) nozzles.

D-2-2 Comparing techniques

When comparing these two jetting methods, the use of high pressure/low volume jetting has the following disadvantages:
- smaller active cleaning area and volume of water, insufficient to carry debris to a manhole for removal;
- new blockage can form downstream of the area being cleaned.
- significantly increased risk of damage to the pipe wall, particularly if the pipeline is in poor condition.;

This can be contrasted with low pressure/high volume jetting which has the following benefits:
- cleaning of full pipe circumference;
- significantly increased hammer action of jet-head on blockages.

Note: A 2,8 mm nozzle at 120 bar is calculated to generate approximately 5 times the energy of a 1,0 mm nozzle at 340 bar. 1 bar = 100 000 Pascal = 100 kPa.
- higher volume of water flushes debris to manhole for removal.
- minimal risk of damage to pipes.

D-3 Conclusions from independent jetting tests

D-3-1 Assessing efficiency and impact

Inevitably, the question arises whether low pressures (not exceeding 120 bar, for example), are capable of achieving the necessary cleaning efficiency for typical maintenance operations.
The efficiency and impact of jetting on the various pipe materials and constructions have been explored in a variety of independent tests over recent years. These studies have been conducted under controlled conditions to ensure the testing can be fairly and consistently replicated.

D-3-2 Testing of plastic pipes

Test work and general practice throughout Europe has demonstrated that, in practice, a pressure of 120 bar is sufficient for all plastics materials. This will remove blockages likely to occur in service, while debris is carried to the manhole by high water volume.

Plastics pipe materials (PVC-U, PE and PP), in solid and structured-wall construction types, were included in an extensive laboratory testing programme and TEPPFA study. New plastics pipes, as well as those which had been in service for several years, were subjected to 120 bar water pressures with a 2,8 mm nozzle over 50 cycles without damage to the pipe.

The test parameters conform to CEN/TR 14920 [9].

D-3-3 Clearing tests

A university study first questioned jetting contractors to identify the various causes of blockages in sewer pipes and map the frequency with which these tended to occur. Of these, two of the more problematic causes were selected to be the subject of simulated clearing tests using jetting:

- Grease/fat: full bore blockage of solidified fat and disposable nappies, consistent with typical in-service operational blockages.
- Solids: one-third bore partial blockage of cured concrete, simulating residual builders' waste left in the pipe invert after installation, primarily encountered pre-commissioning of newly-installed pipes.

The pressure required to remove these blockages was measured for new plastics pipes and is reflected in Table D-1.

Table D – 1 – Required pressure (in bars) for block removal

Material	Grease	Solids
Solid and structured-wall plastics	70	Between 70 and 110

D-4 Supplementary cleaning techniques

In most situations, low pressure/high volume water jetting, in accordance with the recommended practice, is generally sufficient for the removal of blockages and efficient cleaning of plastics sewer pipes. However, for any sewer from time to time, certain other cleaning techniques can also be required, in addition to jetting, to help deal with specific situations. These include the following [1]:

a) cleaning ball;
b) Flushing;
c) Rodding;
d) Winching:

The following technique is also used.

e) Root cutters:

Mechanical tools to remove roots that have penetrated a sewer pipe through cracks or displaced joints. Tools may be cutters or rotating chains; however, these carry a high risk of severe damage to the pipeline and will only provide a temporary solution because the roots will grow back. Only replacement of the affected section of the pipeline and/or removal of the trees concerned can provide a long-term solution.

Note: Personnel entry to sewer systems is not generally recommended. If necessary, all health & safety regulations should be observed. If the flushing technique is used, it is especially important to ensure that no personnel are present in sewers downstream.

[1] The techniques a) to d) are included in EN 752-2007, Drain and sewer systems outside buildings — Sewer system management [10].

D-5 Recommended practice principles for jetting

To achieve efficient cleaning and unblocking of plastics sewer pipes, the following practice principles are recommended.

a) Personnel:

Jetting equipment should only be used by trained personnel.

b) Preparatory:

1) Evaluate, as far as possible, the nature and condition of the sewer to be cleaned, including:

- material type and size.
- structural condition.
- operational condition: flow performance and nature of deposits/blockage(s).

2) Evaluate the associated health and safety factors, particularly in relation to regulations concerning personnel entry into confined spaces.

c) Jetting equipment:

1) Use low pressure/high volume jetting.
2) Avoid high pressure/low volume cleaning techniques.
3) Select nozzle size appropriate to jetting equipment and size of pipe.

d) Jetting pressure/flow rate

1) Maximum pressure at nozzle: 120 bar.

Note: 60 bar is sufficient to remove soft debris.

2) Recommended draw-back speed: 6 m/min to 12 m/min.

e) After jetting:

1) Review the operational condition of the cleaned pipe.

2) If jetting was used to clear a blockage, use CCTV to investigate the possible cause of the blockage that had to be cleared, for example, was it due to structural problems/defects (e.g. cracking or collapse)?

Report and record any information, which may be useful for future maintenance or refurbishment works.

Annex E
(Informative)
Bibliography

[1] ISO 265-1:1988, Pipes and fittings of plastics materials – Fittings for domestic and industrial waste pipes – Basic dimensions: Metric series, Part 1: Unplasticized poly (vinyl chloride) (PVC-U).
[2] EN 295-3:2012, Vitrified clay pipe systems for drains and sewers, Part 3: Test methods.
[3] EN 1401-1, Plastics piping systems for non-pressure underground drainage and sewerage – Unplasticized poly (vinyl chloride) (PVC-U), Part 1: Specifications for pipes, fittings and the system.
[4] EN 1852-1, Plastics piping systems for non-pressure underground drainage and seworage – Polypropylene (PP), Part 1: Specifications for pipes, fittings and the system.
[5] EN 12666-1, Plastics piping systems for non-pressure underground drainage and sewerage – Polyethylene (PE), Part 1: Specifications for pipes, fittings and the system
[6] EN 14758-1, Plastics piping systems for non-pressure underground drainage and sewerage – Polypropylene with mineral modifiers (PP-MD), Part 1: Specifications for pipes, fittings and the system.
[7] CEN/TS 15223:2017, Plastics piping systems – Validated design parameters of buried thermoplastics piping systems.
[8] EN 14654-1, Management and control of operational activities in drain and sewer systems outside buildings, Part 1: Cleaning.
[9] CEN/TR 14920:2005, Jetting resistance of drain and sewer pipes – Moving jet test method.
[10] EN 752:2017, Drain and sewer systems outside buildings – Sewer system management
[11] ISO/TR 7620, Rubber materials – Chemical resistance.